MIC-7411

Intel LGA 1151 6/7/8/9th CPU, 6 x Intel LAN, 4 x RS-232(2 x RS-232/485) , 8 x USB

Product Features

- Intel LGA 1151 6/7/8/9th CPU
- 4 x RS-232(2 x RS-232/485)
- 6 x LAN, 6 x USB, 2 x DP, VGA
- 1 x 2.5" SATA HDD / SSD, 1 x M.2 SSD
- 1 x Mini PCIe
- 24V DC Power Input

Specifications

System	
Processor	Intel LGA 1151 6/7/8/9th CPU
Memory	2 x DDR4 2133 MHz SO-DIMM up to 32GB
Graphics	By CPU
Operating System	Windows 7/8/10, Ubuntu
Storage	
Hard Disk	1 x 2.5" SATA HDD / SSD
SSD	1 x M.2 2280 SSD
I/O Connectors	
COM	4 x RS-232(2 x RS-232/485)
USB	4 x USB 2.0, 4 x USB 3.0
LAN	5 x Intel i210, 1 x Intel i219-LM
Video	2 x DP, 1 x VGA
Audio	Line Out,Mic
Remote Switch	1 x 4Pin Remote (POWER Switch&LED)
Expansion	
PCI/PCIe	1 x PCI, 1 x PCIe X16
Mini PCIe	1 x full-size mini PCIe
SIM	1 x SIM(Inside)
USB KEY	1 x USB2.0 TYPE A
Antenna hole	2 x SMA-type

Power Management	
Power Input	DC 24V
Qualification	
Certifications	CE, FCC Class A
Environmental	
Operating Temp	-10 ~ 50℃(SSD)
Storage Temp	-40 ~ 80℃
Relative Humidity	10 ~ 95% (Non-Condensing)
Mechanical	
Housing	Aluminum alloy
Mounting	Wall-mount
Dimension (W x D x H)	220x256x136mm
Weight	4.6kg

Ordering Information

Product number	Description
MIC-7411	Intel LGA 1151 6/7/8/9th CPU, 3LAN, 4COM, 8USB, 1 x PCI, 1 x PCIe X16
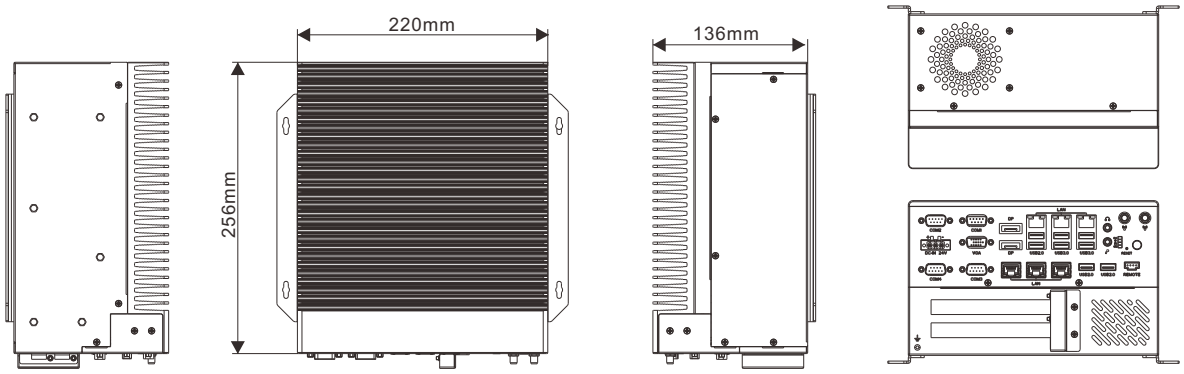
Dimensions