RTC-I101

DARVEEN

10.1" Windows Rugged Tablet with Intel® Celeron® Processor

Overview

Darveen rugged tablets are crafted to withstand the harshest industrial environments, providing mobile solutions that increase productivity, enhance safety, and reduce operational costs. The RTC-I101 is equipped with the Windows 10 or 11 operating system and a 10.1-inch screen supported by stylus, glove, and wet-touch modes. It also features an integrated IPS 700-nit screen for clear visibility and operational comfort, regardless of the weather or application.

Features

- Intel® Celeron® N5100 processor
- Windows 10 or 11 operating systems
- Supports 1D, 2D barcode reader, NFC, RFID, fingerprint (optional)
- Supports 4G, WLAN, BT, and GNSS
- Rich I/O interfaces including: RS-232, RJ45 Ethernet, USB, HDMI
- Removable high-capacity battery design
- IP67 and MIL-STD-810H certified

Windows 10/11 | IP67 | 2D barcode | Fingerprint | 5000mAh | RFID

I/O Interfaces

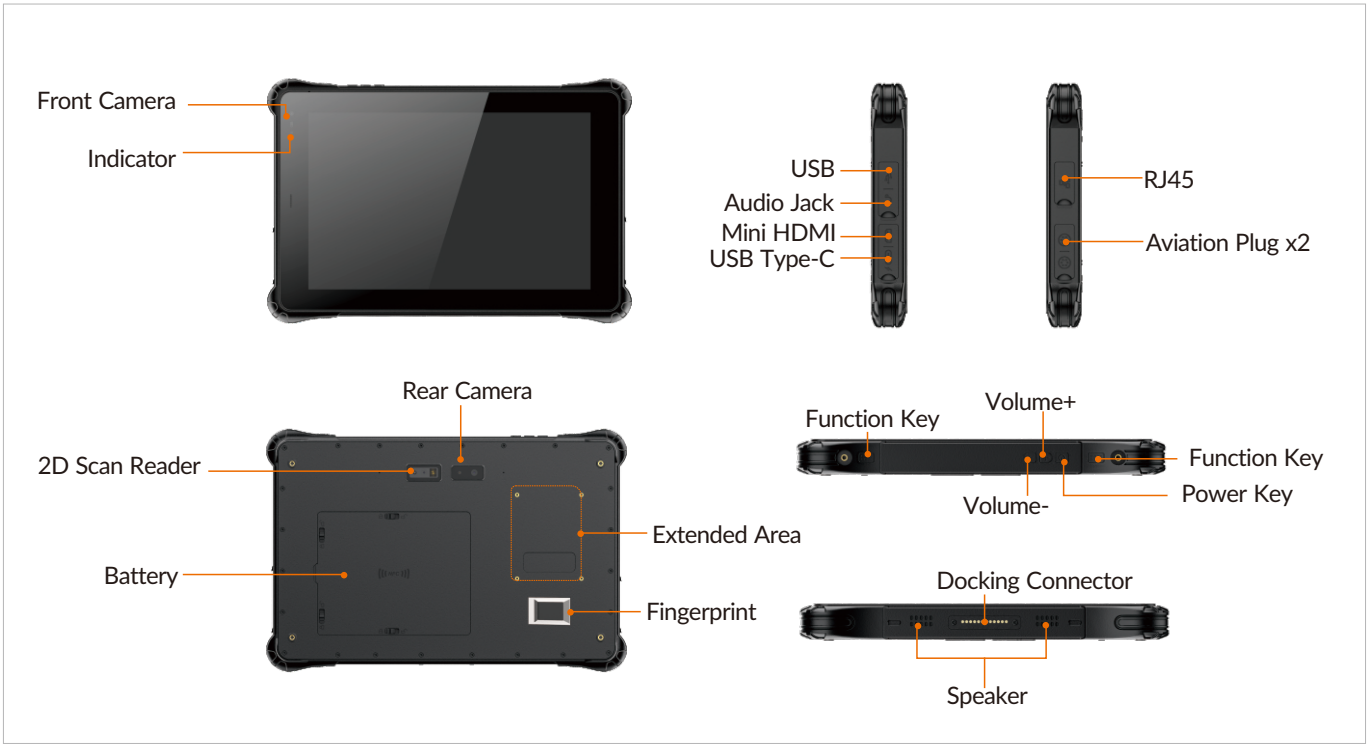

Specifications

Display	
Size	10.1 inch
Touch Type	G+G Capacitive multi-touch screen, gorilla glass, hardness 7h
Resolution	800 x 1280 (1200x 1920 optional)
Luminance	700 nits
Contrast Ratio	1200: 1
View Angles	85 (left), 85 (right), 85 (up), 85 (down)
Color	16.7M
System	
CPU	Intel® Celeron® N5100 (Jasper Lake), 4 MB Intel® Smart Cache, up to 2.8 GHz
Memory	4GB LPDDR4 (optional 8GB)
Storage	64GB SSD (optional 128GB)
Graphics	Intel® UHD Graphics Gen 11 LP
Camera	Front: 5MP fixed-focus camera Rear: 8MP autofocus camera
Sensor	G-sensor
Keypad & Keyboard	
Buttons	1x Power button, 1x Volume+, 1x Volume -, 2x Barcode scan keys
I/O Ports	
USB	1x USB 3.0 Type A 1x USB 2.0 Type C (supports power charging and data transfer)
Ethernet	1x RJ45 10/100/1000M
Display	1x Mini HDMI
Audio	1x 3.5mm audio combo jack
SIM Card Slot	1x Micro SIM card slot
TF Card Slot	1x TF card slot, up to 256GB
Aviation Plug	2x Aviation plug (choose two out of three from USB, RS232 or DC-in)
Docking Connector	1x 12-Pin
RF Communication	
Wi-Fi	Wi-Fi 802.11 (a/b/g/n/ac), dual band (2.4G + 5.0G)
Cellular	WCDMA/HSPA+ : B1/B5/B8 FDD LTE: B1/B3/B5/B7/B8/B20/B28 TDD LTE: B34/B38/B39/B40/B41
Bluetooth	Bluetooth V4.2
GNSS	GPS, GlONASS, BeiDou
Data Collection (Optional)	
NFC	13.56MHz, supports ISO/IEC 14443A/14443B/15693/18092/mifare
RFID	UHF RFID,supports PR9200
Barcode Reader	1D, 2D barcode reader
Fingerprint	FBI/ISO/GA Certification
Audio	
Speaker	8Ω/1W, dual stero speakers
MIC	Built-in microphone
Power	
Power Adapter	Input AC: 100-240V, 50-60Hz, Output DC: PD65W
Battery	Removable lithium-ion polymer battery, 7.6V 5000mAh
Battery Life	6 hours
Operating System	
Windows	Windows 10, Windows 11

RTC-I101

Mechanical	
Dimensions (W x D x H)	280 x 188 x 23mm (11.02 x 7.40 x 0.91 inches)
Weight (N.W.)	1200g (2.65 lbs)
Environment	
Operating Temperature	-10 °C to 50 °C (14 to 122°F)
Storage Temperature	-20 °C to 60 °C (-4 to 140°F)
Relative Humidity	95% @ 40°C (104°F), non-condensing
Vibration	MIL-STD-810H: 2022 Method 514.8 Procedure I
Drop	MIL-STD-810H: 2022 Method 516.8 Procedure IV, 4ft
IP Rating	IP67
Certification	
EMC	CE, FCC
Packing List	
Packing	1x RTC-I101, 1x Battery, 1x Hand strap, 1x Power adapter

Dimensions

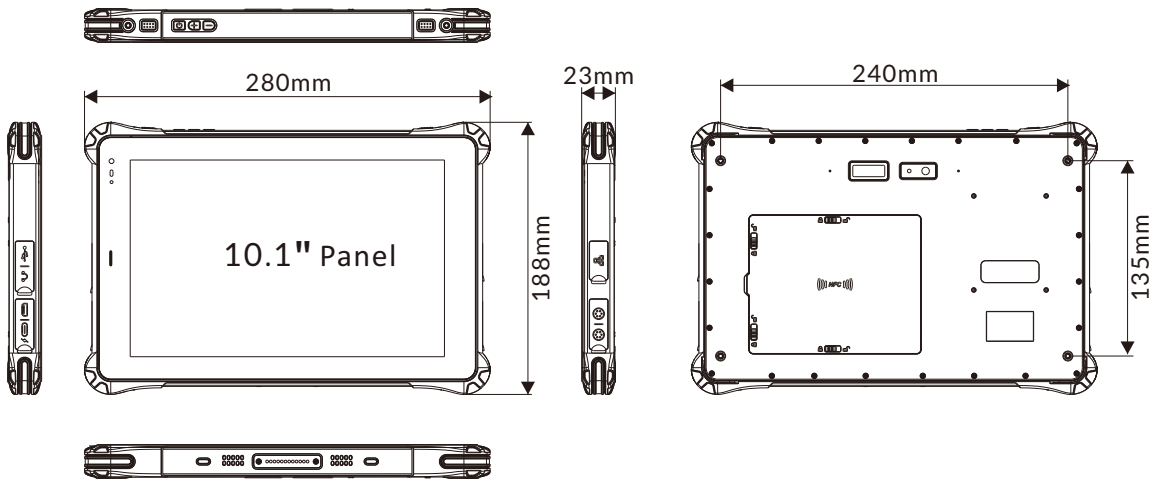

Optional Accessories

Part No.	Description
SS18	Shoulder strap
HS8	Hand strap

Ordering Information

Part No.	Description
RTC-I101-B1000C	800 x 1280@700nit, N5100, 4GB + 64GB, Wi-Fi, Bluetooth, 4G (CN), GPS, 7.6V@5000mAh Battery
RTC-I101-B1000E	800 x 1280@700nit, N5100, 4GB + 64GB, Wi-Fi, Bluetooth, 4G (EU), GPS, 7.6V@5000mAh Battery
RTC-I101-B1200C	800 x 1280@700nit, N5100, 4GB + 64GB, Wi-Fi, Bluetooth, 4G (CN), GPS, 7.6V@5000mAh Battery, 2D Barcode
RTC-I101-B2000C	800 x 1280@700nit, N5100, 8GB + 128GB, Wi-Fi, Bluetooth, 4G (CN), GPS, 7.6V@5000mAh Battery
RTC-I101-B2000E	800 x 1280@700nit, N5100, 8GB + 128GB, Wi-Fi, Bluetooth, 4G (EU), GPS, 7.6V@5000mAh Battery
RTC-I101-B2200C	800 x 1280@700nit, N5100, 8GB + 128GB, Wi-Fi, Bluetooth, 4G (CN), GPS, 7.6V@5000mAh Battery, 2D Barcode

Update: September 16, 2025 Email: sales@darveen.com
© Darveen Co., Ltd. All rights reserved. All specifications and photos are subject to change without notice.