DPC-8156

DARVEEN

15.6" Industrial Touch Panel PC with 10th Gen Intel® Core™ i Processor

Overview

The DPC-8156 is a fanless 15.6" industrial panel PC that supports 10th generation Intel® Core™ i5 processors for high-performance computing. It features a modular design to allow easy CPU board or I/O board upgrades and ensures a stable system structure and reliable industrial performance. With a choice of 4:3 and 16:9 aspect ratios and optional resistive or capacitive touchscreen, the DPC-8156 provides display versatility. The aluminum alloy IP65-rated front panel, metal body, and excellent heat dissipation offer longevity, functionality, and rust resistance for industrial applications.

Features

- 15.6" LED-backlit LCD with capacitive or resistive touch screen
- Rugged aluminum enclosure and fanless design
- 10th Gen Intel® Core™ i5 processor
- 3x COM, 4x USB, 4x LAN, 1x HDMI
- Supports VESA 100 mount and panel mount
- IP65 compliant front panel

Operating Temp. Fanless IP65 Touch Display

I/O Interfaces

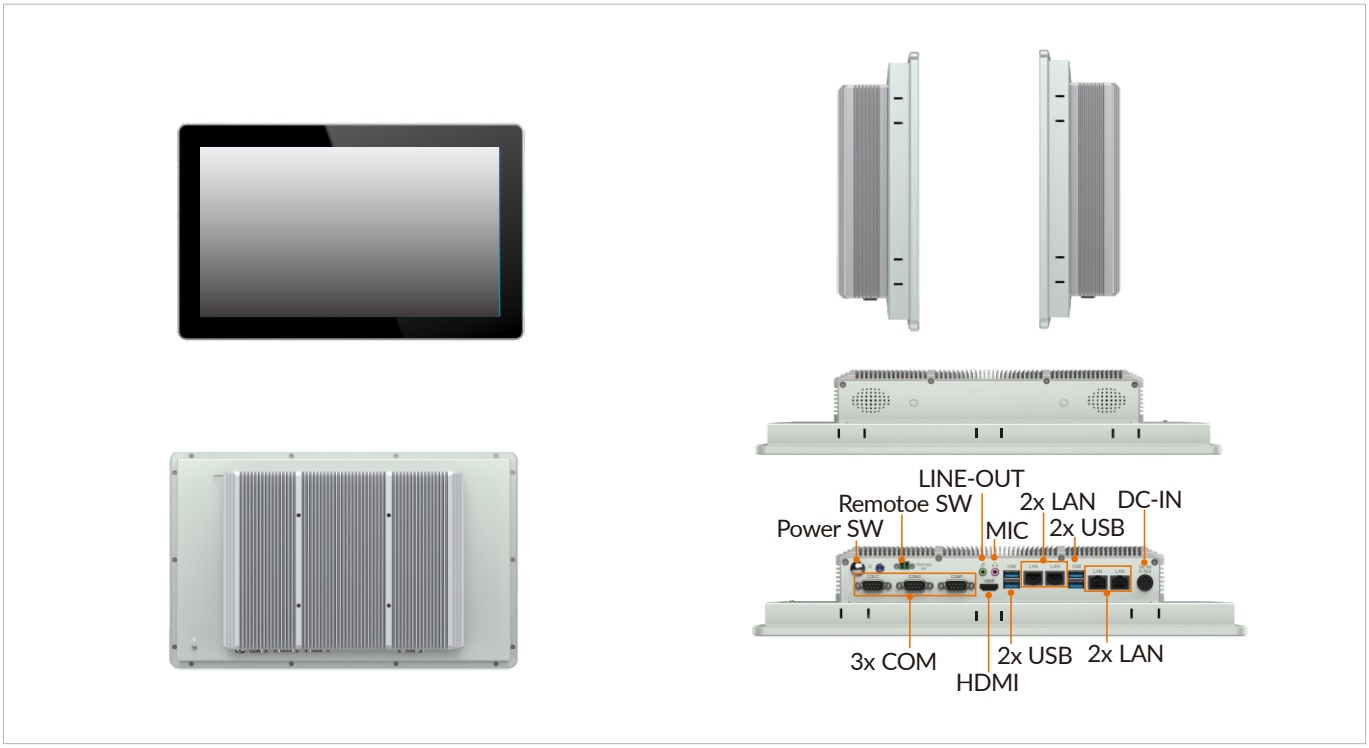

DARVEEN

Specifications

Display		
Size	15.6 inch	
Touch Type	5-wire resistive touch projected capacitive multi touch (optional)	
Transmittance	87% (capacitive) / 80% (resistive)	
Control Interface	USB	
Surface Hardness	≥7H/≥3H	
Resolution	1920 x 1080	
Luminance	450 nits	
Contrast Ratio	1000: 1	
View Angles	85 (left), 85 (right), 85 (up), 85 (down)	
LED Lifetime	50,000 hrs	
Color	16.7M	
System		
CPU	Intel®Core™ i5-10210U(1.6 GHz) quad-core eight-thread processor	Intel Core™ i7-10710U (1.1 GHz) Six Core Twelve Thread Processor
Memory	2x DDR4 2666 SO-DIMM (up to 64GB)	2x DDR4 2666 SO-DIMM (up to 64GB)
Storage	1x 2.5" SATA HDD/SSD (optional) 1x full length Mini PCIe for mSATA SSD	
I/O Ports		
USB	4x USB 3.0	
Serial	3x COM (COM1 supports RS-232, COM2 and COM3 support RS-232/422/485)	
Ethernet	4x GbE LAN	
Display	1x HDMI	
Antenna	2x SMA antenna holes	
Expansion Slot		
Mini PCIe	1x full length Mini PCIe for Wi-Fi 1x full length Mini PCIe for mSATA	
RF Communication		
Wi-Fi	Mini PCIe expansion (optional)	
Cellular	Mini PCIe expansion (optional)	
Bluetooth	Mini PCIe expansion (optional)	
Audio		
Audio	Mic in, line out	
Speaker	2Ω5W speaker	
Power		
Button	Yes	
Remote Power On/Off	1x Remote switch connector	
DC Input	9 to 36VDC	
Power Connector	M12	
Power Consumption	27W	29W
Ignition On/Off	1x AC loss	
Power Adaptor	AC-DC, 12V@7.5A, 90W	
Operating System		
Windows	Windows 10, Windows 11	
Linux	Ubuntu	
Mechanical		
Dimensions (W x D x H)	399 x 249 x 73 mm (15.7 x 9.8 x 2.9 inches)	
Weight (N.W.)	5.1 kg (11.2 lbs)	
Mounting	Panel mount, wall mount bracket VESA 100	
Material	Aluminum alloy panel, all-metal chassis	

Environment	
Operating Temperature	-10 to 50°C (14 to 122°F)
Storage Temperature	-20 to 60°C (-4 to 140°F)
Relative Humidity	10% to 95% @ 40°C (104°F), non-condensing
Vibration	5-500Hz, 0.026 G^2/Hz, 2.16 Grms, X, Y, Z, 1 hour per axis
IP Rating	IP65 compliant (for front panel)
Certification	
EMC	CE, FCC
Packing List	
Packing	1x DPC-8156 10x panel mounting buckles 1x warranty card

Dimensions

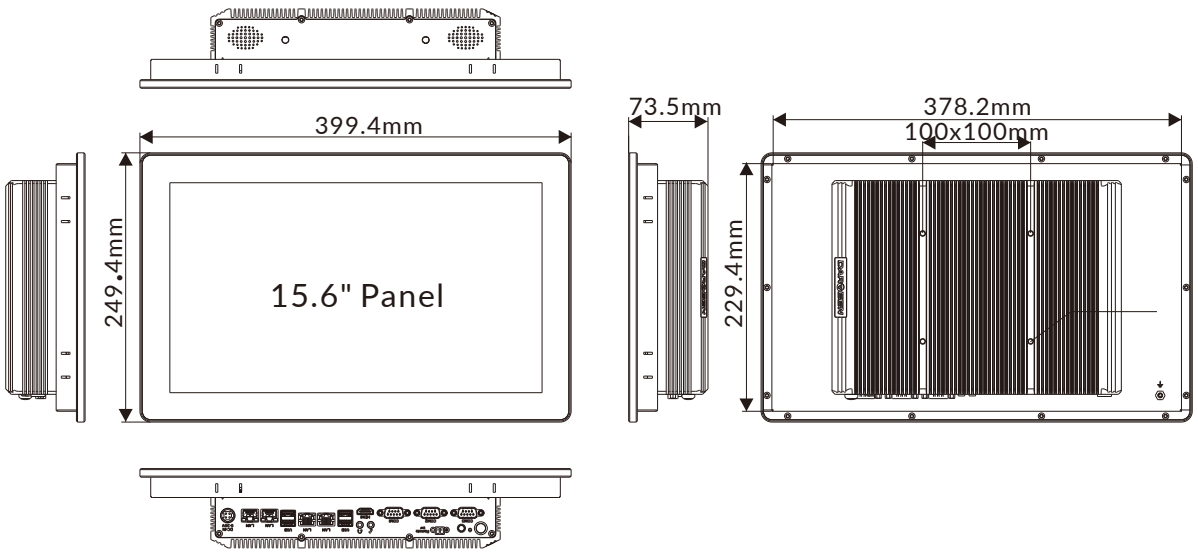

© Darveen Co., Ltd. All rights reserved. All specifications and photos are subject to change without notice.