DPM-1101

10.1" Industrial Touch Monitor with Capacitive Touch Screen

Overview

The DPM-1101 is an 10.1-inch widescreen industrial monitor designed for industrial applications. It features a projected capacitive multi-touch, housed within a highly durable metal casing, providing front panel IP65-rated protection from water and dust ingress. It supports three signal interfaces via VGA, HDMI, and DVI. Furthermore, the ultra-thin design of the DPM-1101 enables both VESA 75 mount and panel mount installation, simplifying the installation process in different applications.

Features

- 10.1" LED-backlit LCD with capacitive touch screen
- 1x VGA, 1x DVI, 1x HDMI, 1x USB2.0
- DC-IN 12 to 24V
- Supports VESA 75 mount and panel mount
- IP65 compliant front panel





Operating Temp. IP65 Touch Display

I/O Interfaces



Specifications

Display	
Size	10.1 inch
Touch Type	Projected capacitive multi touch
Transmittance	87% (capacitive)
Control Interface	USB
Surface Hardness	≥7H
Resolution	1280 x 800
Luminance	350 nits
Contrast Ratio	1000: 1
View Angles	80 (left), 80 (right), 80 (up), 80 (down)
LED Lifetime	25,000 hrs
Color	16.7M
I/O Ports	
USB	1x USB 2.0
Display	1x HDMI, 1x VGA, 1x DVI
Power	
Button	Yes
DC Input	12 to 24VDC
Power Connector	Button
Power Consumption	10W
Power Adaptor	AC-DC, 12V@5A, 60W
Mechanical	
Dimensions (W x D x H)	261.5x 174.6 x 29 mm (10.3 x 6.9 x 1.5 inches)
Weight (N.W.)	1.1 kg (4 lbs)
Mounting	Panel mount, wall mount bracket VESA 75
Material	Aluminum alloy panel, all-metal chassis
Environment	
Operating Temperature	-10 to 50°C (14 to 122°F)
Storage Temperature	-20 to 60°C (-4 to 140°F)
Relative Humidity	10% to 95% @ 40°C (104°F), non-condensing
Vibration	5 to 500Hz, 0.026 G^2/Hz, 2.16 Grms, X, Y, Z, 1 hour per axis
IP Rating	IP65 compliant (for front panel)
Certification	
EMC	CE FCC
Packing List	
Packing List	1x DPM-1101 6x panel mounting buckles 1x warranty card

Dimensions

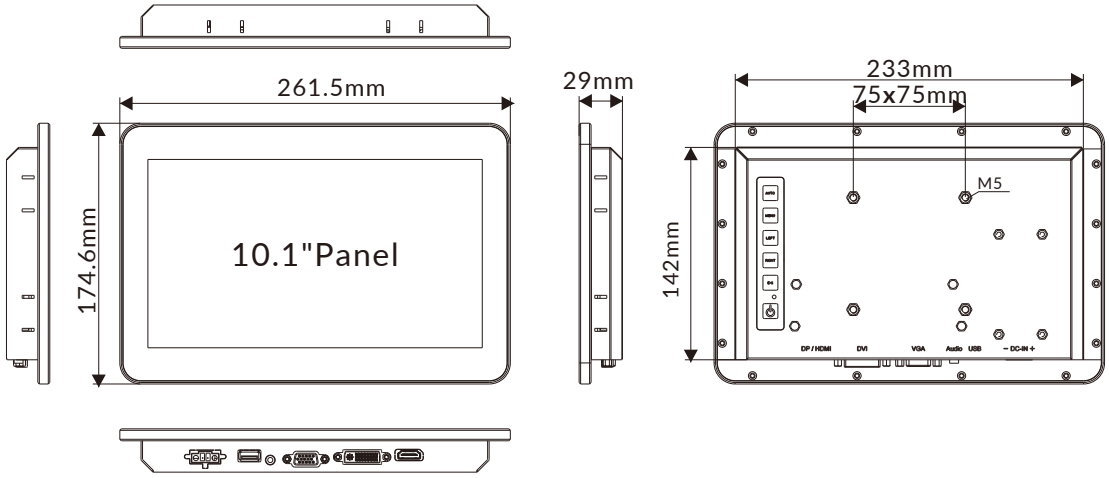

© Darveen Co., Ltd. All rights reserved. All specifications and photos are subject to change without notice.